SCHEDA TECNICA ***TECHNICAL FEATURES***

ART. COD. **338 Q 332 OS**

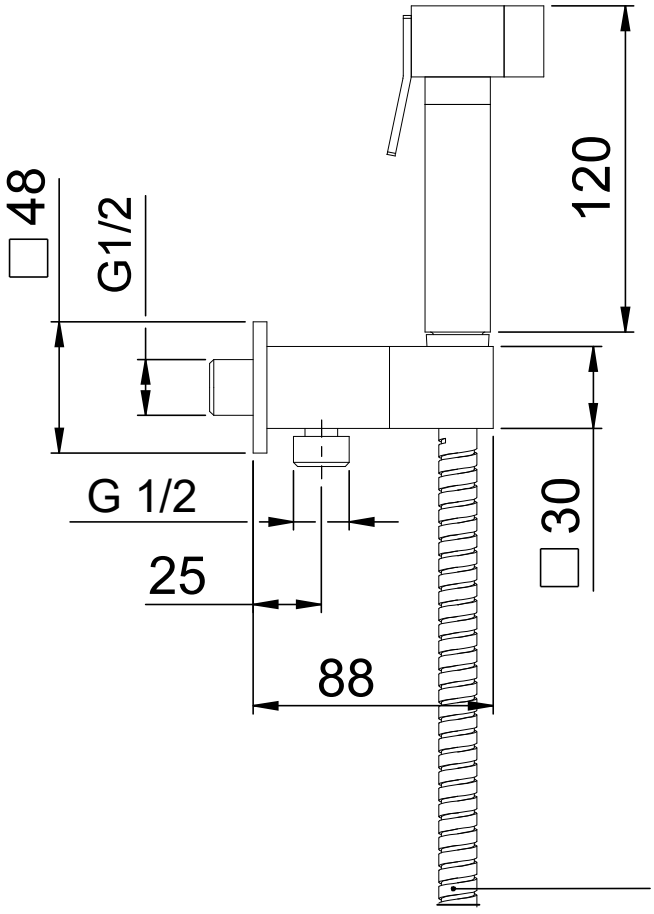

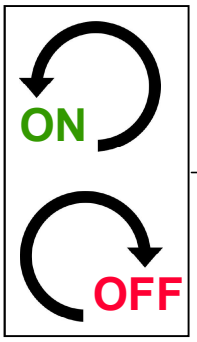

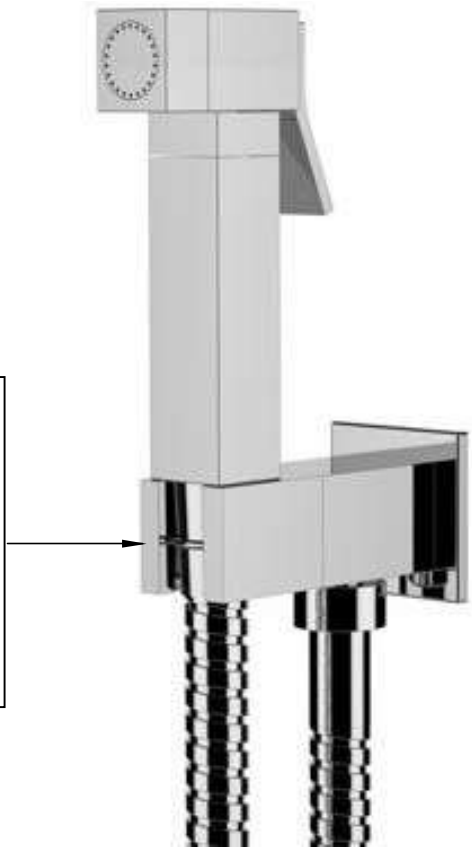

MATERIALI / MATERIALS

OTTONE CROMATO / CHROME PLATED BRASS

CROMATURA / CHROME PLATING

UNI EN 248

Via Leonardo da Vinci 83 - 20062 Cassano d'Adda (MI) Italy - Tel. +39-0363 364211

info@remer.eu **www.remer.eu**